# Art.: 3028

## Válvula de esfera serie ligera / Ball valve light series

| Características | Features |
|---|---|
| 1. Válvula esfera con paso estándar. | 1. Ball valve with standard bore. |
| 2. Construcción en latón s/ UNE-EN 12165 cromado. | 2. Brass acc/ UNE-EN12165 chrome plated. |
| 3. Extremos rosca gas (BSP) H-H según ISO 228/1 | 3. Gas (BSP) threaded F-F ends ac/ ISO 228/1 |
| 4. Accionamiento mediante palanca de acero | 4. Working by means of steel lever handle. |
| 5. Temperatura de trabajo desde -20ºC a 110ºC. | 5. Working temperature from -20ºC to 110ºC. |
| 6. Presión máxima de trabajo 25 bar (PN 25). | 6. Maximum working pressure 25 bar (PN 25). |
| 7. Asientos PTFE | 7. PTFE Seats. |
| 8. Certificado de conformidad Sanitaria ACS | 8. ACS certified |
| 9. Cumple con el RD03/2023. Criterios para la calidad del agua de consumo humano. | 9. Complies with RD03/2023. Criteria for the quality of water intended for human consumption. |

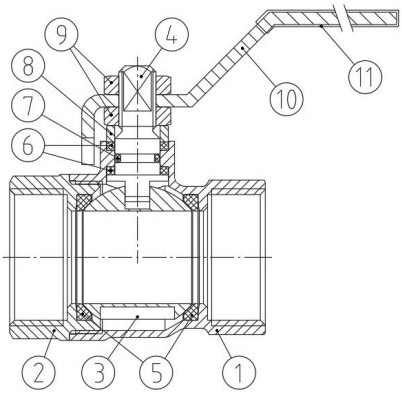


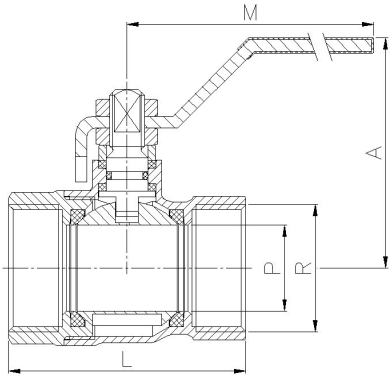


| Nº | Denominación / Name | Material | Acabado Superficial / Surface Treatment |
|---|---|---|---|
| 1 | Cuerpo / Body | Latón / Brass (CW617N) | Granallado + Cromado / Peened + Chromed |
| 2 | Tapa / Cap | Latón / Brass (CW617N) | Granallado + Cromado / Peened + Chromed |
| 3 | Esfera / Ball | Latón / Brass (CW617N) | Cromado / Chrome plated |
| 4 | Eje / Stem | Latón / Brass (CW617N) | Cromado / Chrome plated |
| 5 | Asientos / Ball seats | PTFE | - |
| 6 | Anillo prensa / Stem packing | PTFE | - |
| 7 | Tórica / O-Ring | NBR | - |
| 8 | Anillo prensa / Stem ring | Latón / Brass | Cromado / Chrome plated |
| 9 | Tuerca / Nut | Latón / Brass | Cromado / Chrome plated |
| 10 | Maneta / Handle | Acero / Steel | Dacromet ® |
| 11 | Funda / Handle sleeve | Vinilo / Vynil | - |

| Ref. | Medida / Size R | DN | Dimensiones / Dimensions (mm) P | A | L | M | Peso / Weight (Kg) |
|---|---|---|---|---|---|---|---|
| **3028 04** | 1/2" | 15 | 14 | 46 | 44 | 84 | 0,133 |
| **3028 05** | 3/4" | 20 | 18 | 50 | 51 | 84 | 0,199 |
| **3028 06** | 1" | 25 | 23 | 57 | 61 | 92 | 0,317 |
| **3028 07** | 1 1/4" | 32 | 27 | 63 | 71 | 98 | 0,426 |
| **3028 08** | 1 1/2" | 40 | 34 | 74 | 81 | 113 | 0,704 |
| **3028 09** | 2" | 50 | 43 | 83 | 93 | 126 | 1,005 |
| **3028 10** | 2 1/2" | 65 | 52 | 96 | 118 | 158 | 1,852 |
| **3028 11** | 3" | 80 | 65 | 126 | 137 | 196 | 3,103 |
| **3028 12** | 4" | 100 | 79 | 137 | 163 | 265 | 4,815 |

## DIAGRAMA PÉRDIDA DE CARGA / HEAD LOSS CHART

(Válvulas paso estándar roscadas / Threaded ends standard bore ball valves)

Valores de Kv / Kv Values:

**Kv** = Es la cantidad de metros cúbicos por hora que pasará a través de la válvula generando una pérdida de carga de 1 bar.
**Kv** = The flow rate of water in cubic meters per hour that will generate a pressure drop of 1 bar across the valve.

| Medida / Size | 1/2" | 3/4" | 1" | 1 1/4" | 1 1/2" | 2" | 2 1/2" | 3" | 4" |
|---|---|---|---|---|---|---|---|---|---|
| Kv | 15 | 26 | 42 | 58 | 82 | 150 | 230 | 315 | 400 |

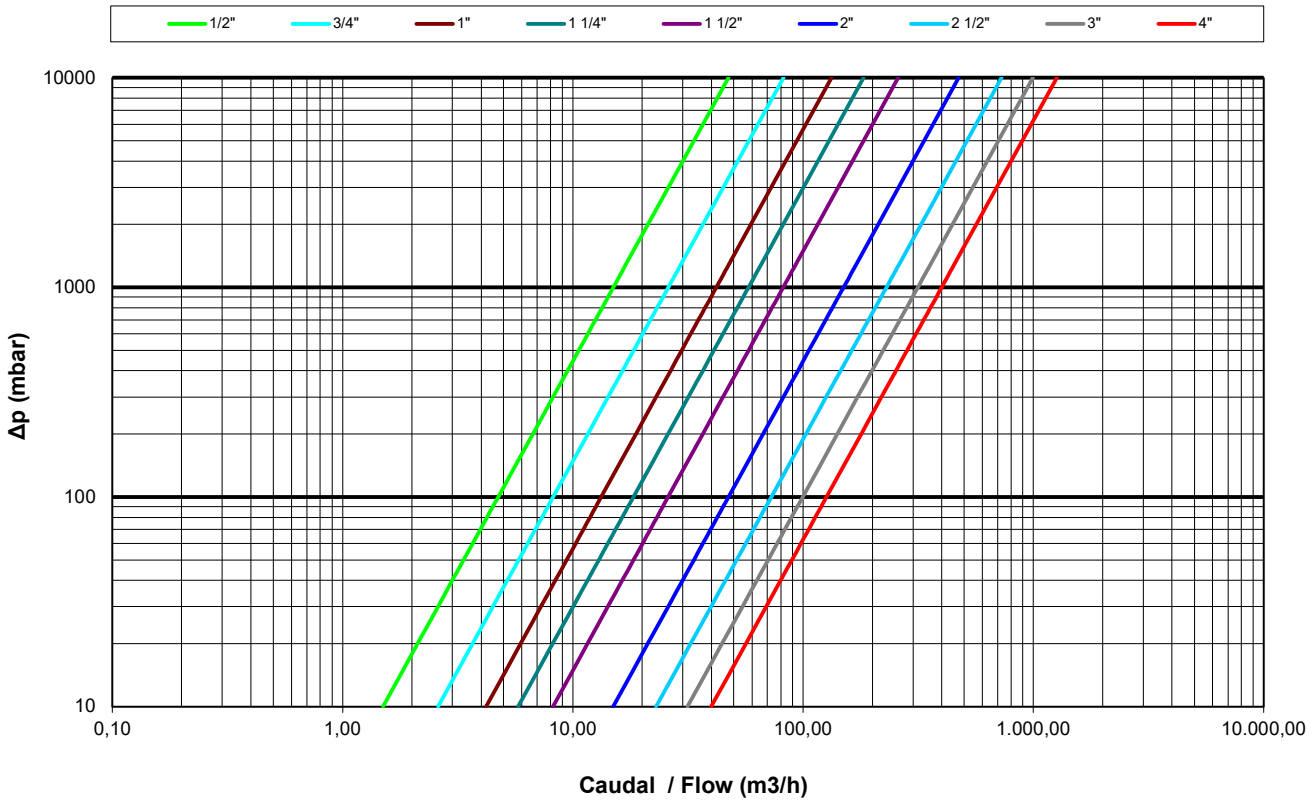
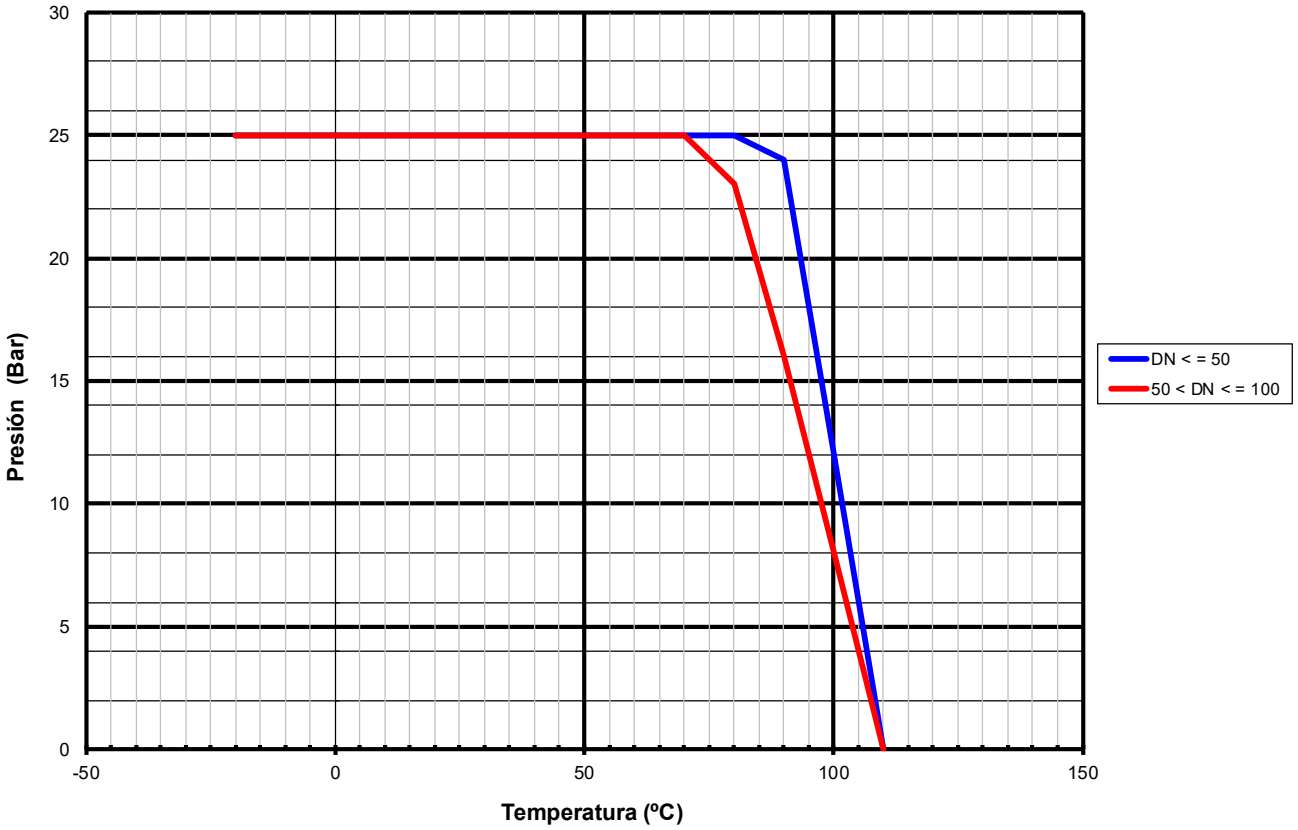
## CURVA PRESIÓN - TEMPERATURA / PRESSURE - TEMPERATURE RATING